Highly insulating DC/DC converter with 24kV insulation voltage

Particularly in the sector for medium voltage applications highly insulated auxiliary power supplies are indispensable due to high potential differences between the reference potential of power semiconductors or measuring systems and the earthing point.

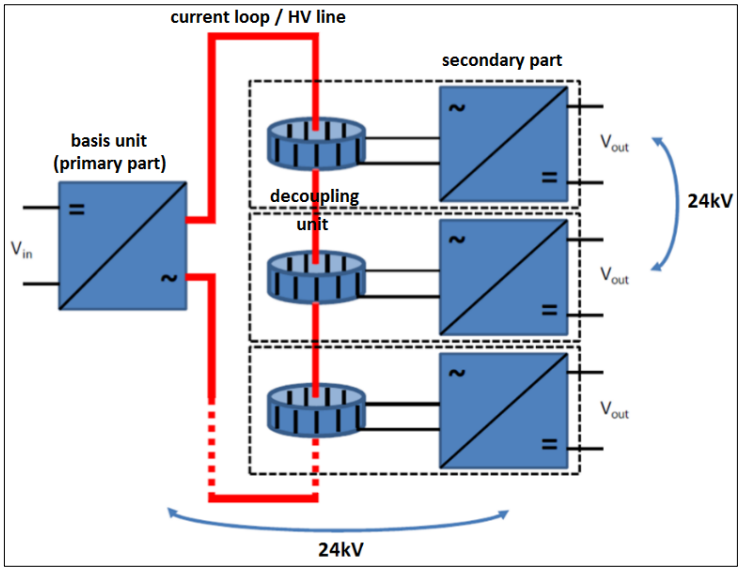

Figure 1: Functional principle IPSS

For applications with up to 24kV insulation voltage, the GvA Power Electronics GmbH offers a simple, flexible and compact solution. The "Inductive Power Supply System" (IPSS) is a modular, highly insulating DC voltage source characterized by high insulation strength combined with remarkable performance and system compatibility.

The IPSS consists of a base unit that can supply several galvanically isolated decoupling units via one current loop (see Equation 1). These decoupling units are available with various output voltages between 12V and 24V and function as an auxiliary power supply for multiple applications. The high insulation resistance is ensured by the inductive transmission path and thus by the voltage resistance of the current loop.

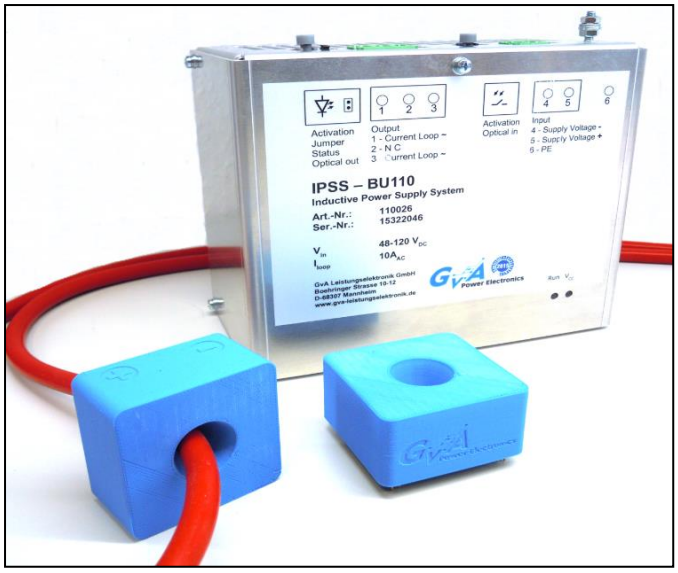

Figure 2: Basis unit with two decoupling units

Standard functions of the IPSS:

- compact design
  - base unit: 166x 140x 100mm
  - decoupling unit: 49,5x 49,5x 32,6mm
- continuous output:
  - output power, max: 35W
  - per decoupling unit, max : 10W
- wide input voltage range: 20-125V DC
- different output voltages: 12V /15V /24V
- insulation voltage: 24kV AC
- partial discharge extinction voltage: 13kV AC (prim.-sec.)

Dimensioning

The Base Unit (BU) represents the primary side part of the system which is related to earth potential. The BU is supplied with DC voltage (20VDC to 70VDC) for BU48 or (50VDC to 125VDC) for BU110. The required primary voltage level depends on the number of decoupling units to be supplied and their output power. For the dimensioning of the system, equation 1 is to be used.

Equation 1:

$$\frac{15W + 1{,}2 * (n * U_{out} * I_{out})}{U_{in}} \leq I_{in\_max}$$

n =	*number of decoupling units*
Uout =	*output voltage decoupling units*
Iout =	*output current decoupling units*
Uin =	*input voltage base unit*
Iin_max =	*maximum current consumption base unit (fixed at 4A)*

Note: The maximum continuous output power of all decoupling units, which are supplied by one basic unit is limited to $P_{max\_sum\_DU} = 35W$.

Typical applications

Typical application areas for the IPSS are systems for electrical power supply and power transmission which use power semiconductors such as thyristors or IGBTs for converting and controlling the electrical output power. Modern power semiconductors are nowadays capable of switching currents of several thousand amperes at voltages of several thousand volts. To ensure that they can be operated and monitored safely, power supplies are needed which are connected directly to the potential of the power semiconductors and need to be electrically isolated from the control and regulation systems of the plant.

These include, among others:

- driverboards e.g. for thyristors or IGBTs, in particular in medium voltage applications or in the case of (multiple) series connection of power semiconductors or cascaded systems and voltage multilevel inverter systems
- measurement and sensor systems (temperature, current, voltage sense)
- other electrical loads at medium voltage potential
- applications in which several isolated power supplies are required in a small space, since one base unit can supply a large number of decoupling units

Medium voltage applications

In order to establish the required high blocking voltages for power electronic equipment used within this sector, the series connection of semiconductors becomes mandatory. Each semiconductor is provided with its own drive unit. According to the circuit structure, these are at different potentials to earth. As a result potential differences of several thousand volts have to be handled by the insulation of the power supply. The power supplies required for the control units must have an insulation resistance that is higher than the maximum potential differences described. For such an application, the "Inductive Power Supply System" was developed.

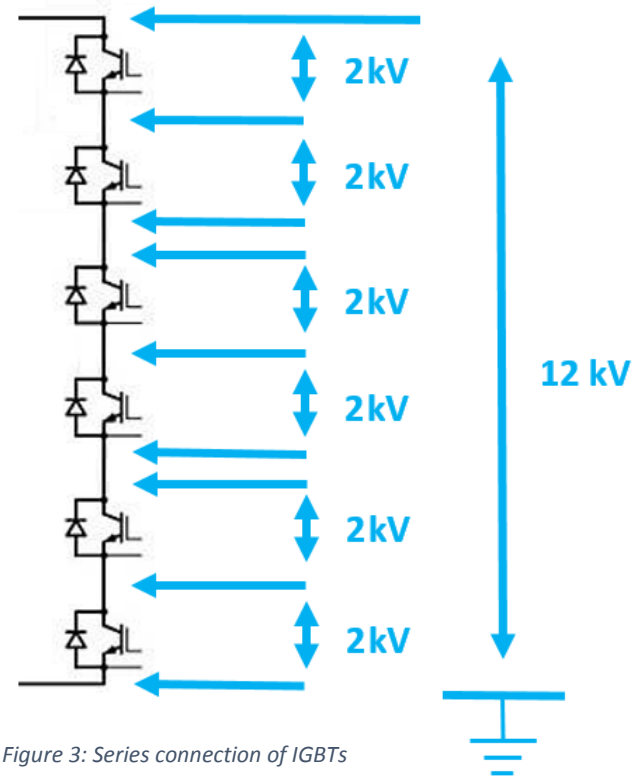

Figure 3: Series connection of IGBTs

IGBT inverter

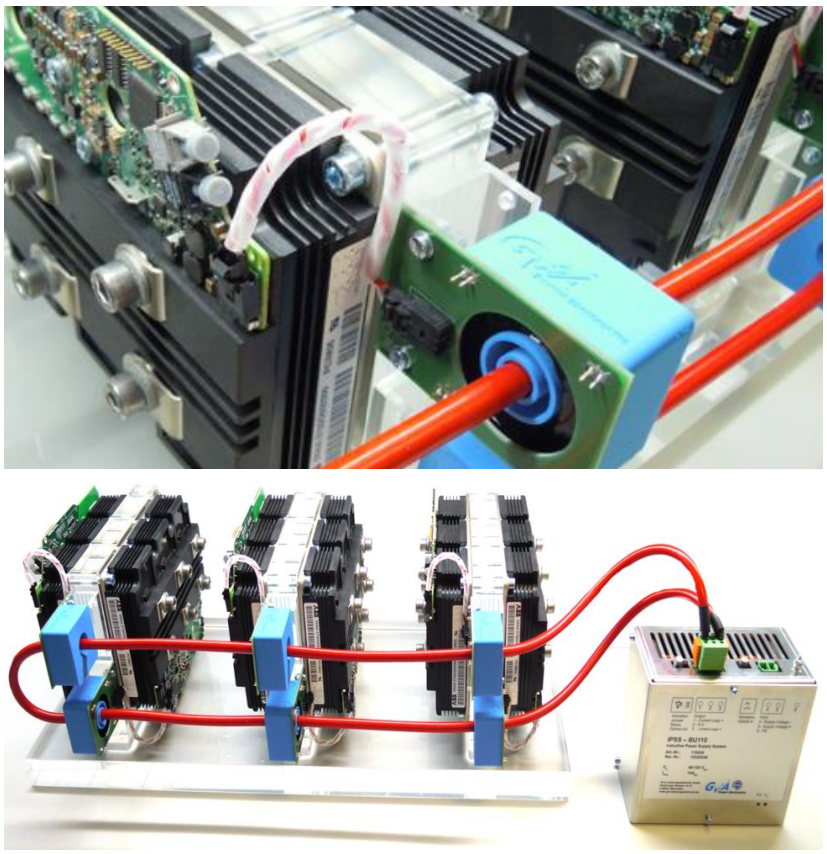

Figure 4: Generic supply of IGBT drivers

One application area of the IPSS are the medium voltage IGBT inverter. The IPSS is suitable for almost all converter topologies. The decoupling units are used to supply voltage to the driver boards of the IGBT modules. Depending on the number of semiconductor switches even a single base unit is sufficient and thus replaces a variety of power supplies. In addition, it is possible to provide the necessary voltage for sensor or measuring systems via the same current loop, since also decoupling units with different output voltages can be supplied by the same base unit.

IGBT DC switches

The energy transition and alternative storage systems, as well as HVDC systems, make DC switches, in the medium voltage range, more and more important. High operating voltages and rising reverse voltages of IGBT modules mean that the common power supplies for control electronics are reaching their limits in this area as well. As in the field of IGBT inverters, the IPSS also offers a comfortable alternative here.

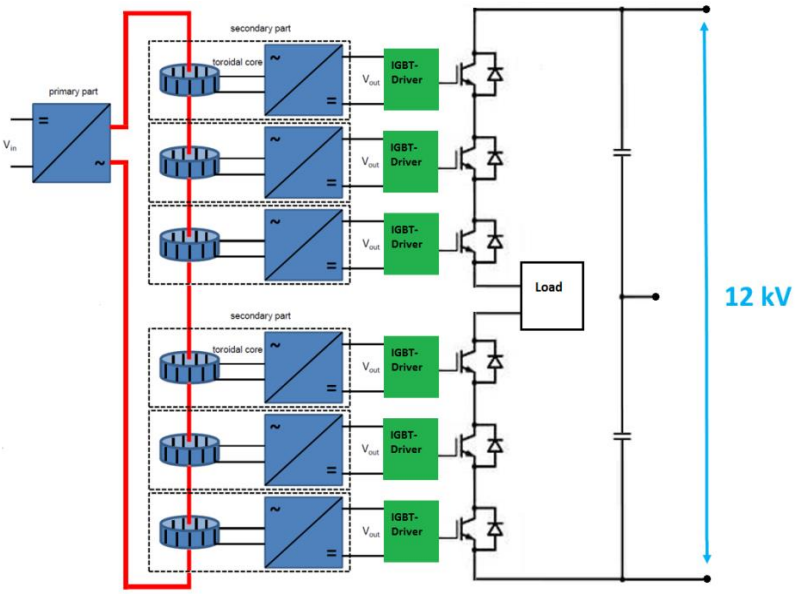

Figure 5: IGBT DC switch

Thyristor applications

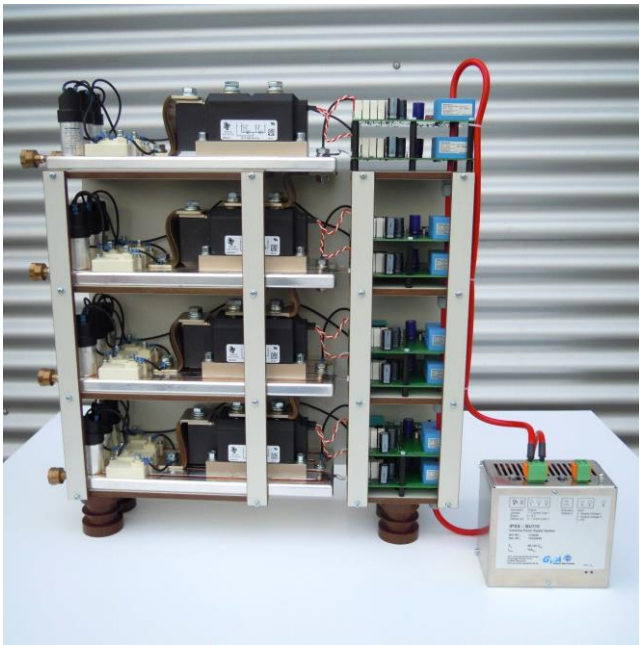

Figure 6: Thyristor stack

Particularly in grid and high current applications, the semiconductors used are thyristors. Whether in regulated rectifiers, for the soft start of three phase motors or as a replacement for mechanical medium-voltage switches; the high reverse voltages of the new thyristor generations require in each case a highly insulated voltage supply of the related firing unit. The GvA not only offers the option of using the IPSS, but also has a plug-and-play solution for thyristor control boards.

Plug-and-play thyristor control board

The plug-and-play thyristor control board is a ready-made thyristor firing unit that can cover a wide range of thyristor applications and is supplied by an integrated IPSS. It is designed to fire modules and disc cells up to a reverse voltage range of 8kV. Optionally, a protective firing function can be provided for voltages from 1200V up to 4200V. The control signals are received via optical fibers.

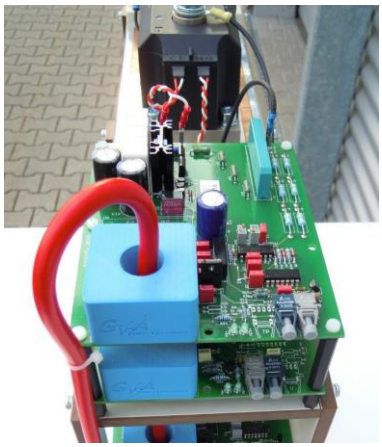

Figure 7: Plug-and-play firing unit

Other applications

In addition to the exemplary IGBT and thyristor applications, the IPSS can be installed in all electrical systems that requires highly isolated control voltages.

Insulation voltage not sufficient?

Figure 8: GPSS

For the applications where the 24kV insulation voltage is insufficient, the GvA offers a simple extension, the "GvA Power Supply System" (GPSS)*. The GPSS is a DC voltage source with a partial discharge extinction voltage of 21kV and an insulation resistance of 50kV. By using the GPSS to supply the IPSS, an insulation voltage of 50kV between the power output stage and the control electronics can be realized. In addition, the insulation voltage of 24kV between the different systems connected to the IPSS is remained.

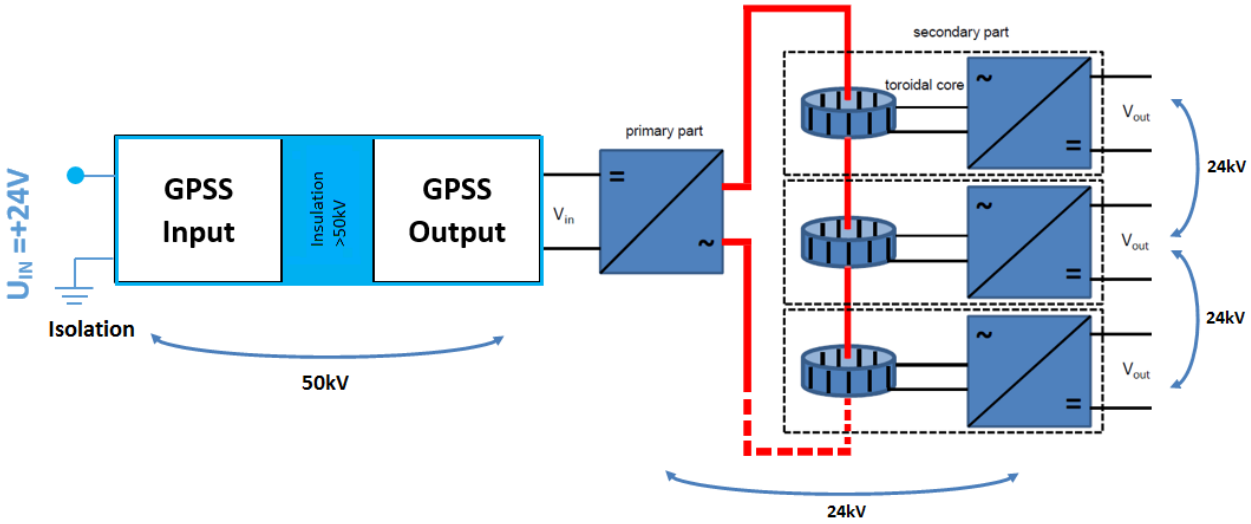

Figure 9: Extended insulation through integration of the GPSS

Current projects

Figure 10: IPSS use in a crowbar switch

Among other applications, the IPSS is currently being used in a 12kV AC switch. It provides the supply voltage of 16 firing boards for the control of thyristor cells. The overall system has the function of a crowbar switch to minimize the effects of arcing faults.

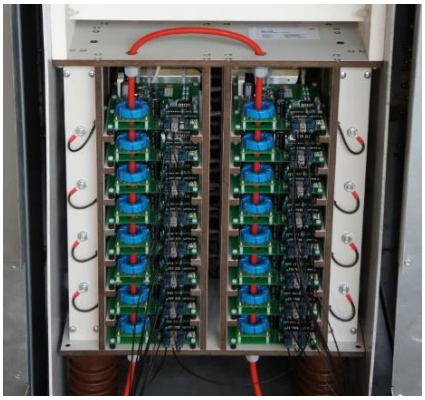

Figure 11: Connected state

www.gva-leistungselektronik.de/en/gva-solutions/#c91-ipss

*for more detailed information about the GPSS see
www.gva-leistungselektronik.de/en/gva-solutions/#c503-gpss

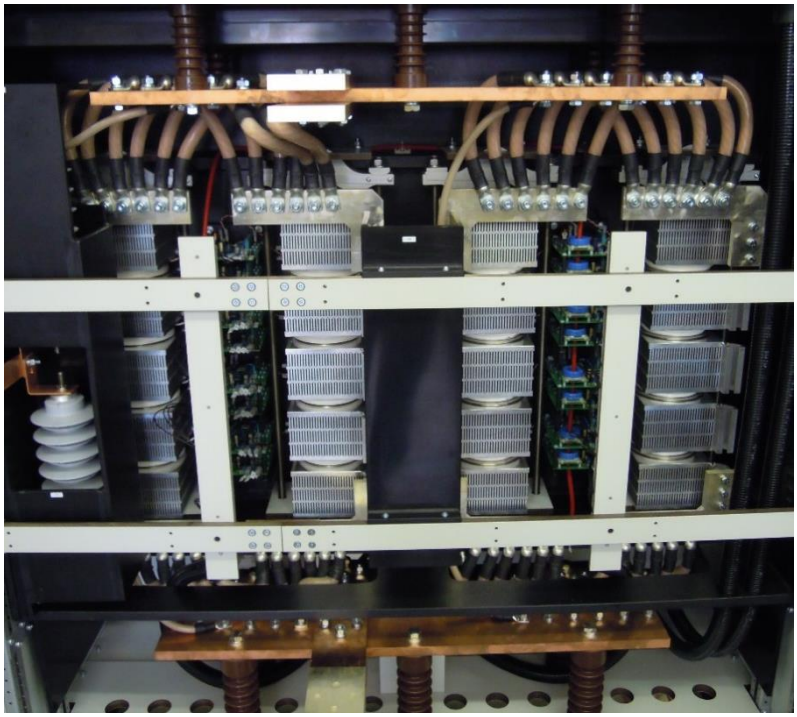

Figure 13: 7kV/5kA thyristor switch

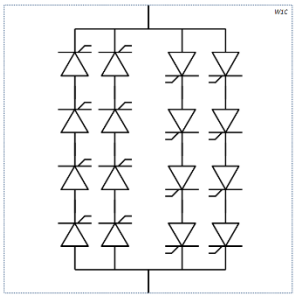

Figure 12: W1C thyristor switch

Likewise for the control of thyristor firing boards, the IPSS is currently operated in a 7kV / 5kA thyristor switch for testing on-load tap-changers. A base unit supplies 16 plug-and-play firing boards for a W1C thyristor switch with power. In this particular application the entire power electronics are at a potential of 25kVAC to earth. Therefor the insulation voltage of the IPSS would not be sufficient. For this reason, as described above, the first insulation stage is provided by a GPSS module (necessary for the 25kVAC) and then the IPSS is used for the supply of the individual thyristor control units.

A total of 36 IPSS decoupling units are used in a 24kV / 600A semiconductor switch system to power the firing units of 18 thyristor dual modules. This system also uses a combination of the different insulation techniques of the IPSS and GPSS voltage sources to ensure the necessary partial discharge of the auxiliary power supplies with an operating voltage of 24kVAC. This system is also used for the qualification and testing of on-load tap-changers.

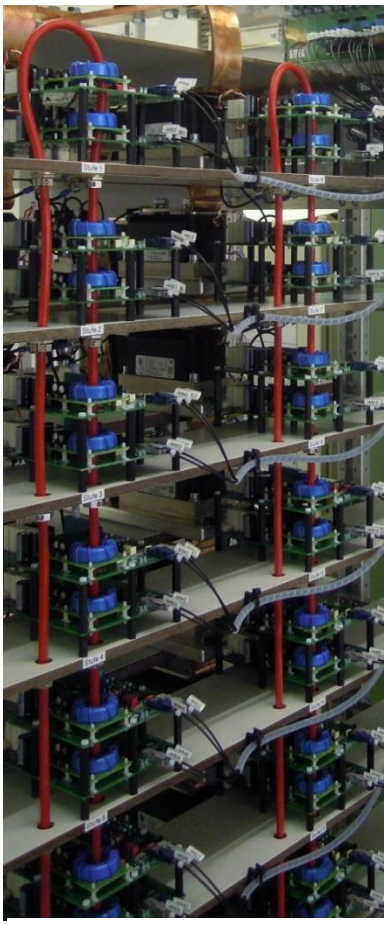

Figure 14: 24kV thyristor switch

IPSS and GPSS are the basic modules for reliable, cost-effective and flexible auxiliary power supply in medium-voltage systems.

We will be pleased to give you advice.